PARAMOUNT
EXPECT MORE...

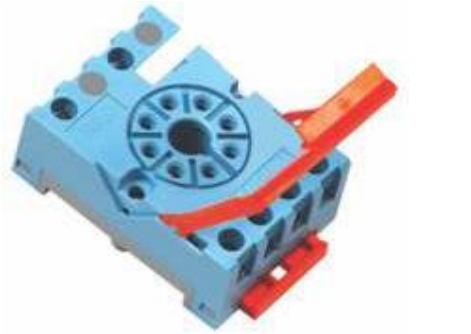

S8LD-X

Only **38 mm** WIDE

Socket DIN Rail or Panel Mountable for P3 1NO + 1NC Relay

Wiring diagram

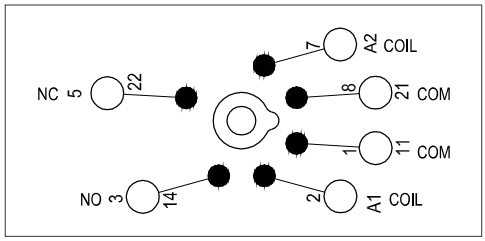

Specifications

Poles	1 NO + 1NC Contact (8pins)
Nominal load :	10A / 250V
Insulation: Di-electric strength, 1minute	
Between contact and coil	2.5 KV
Between all terminals and DIN Rail	2.5 KV
Between adjacent terminals	2.5 KV
Max. screw torque	0.5 Nm
Screw dimensions	M3, Pozi
Weight Approx.	47 gms.

Dimensions in mm

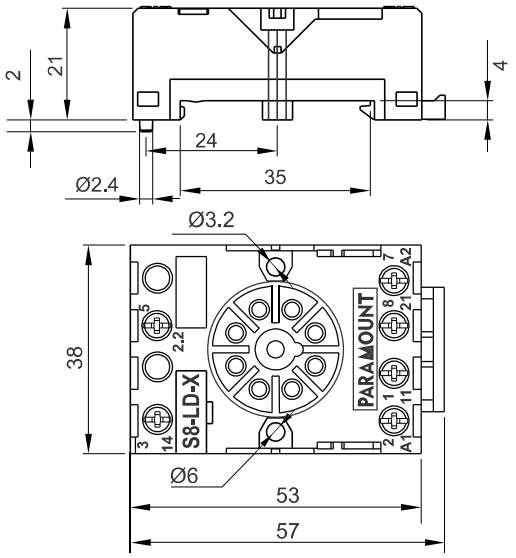

Other Aspects

DIN Rail / Panel Mountable
EN / DIN Sequential Numbering according to EN 60947 & IEC 61810
Integrated Relay Hold Down Clip
Removable White Marking Label

Accessories

S8LD-B1

C Terminal

Accessories

S8LD-B1 - 1 Way Bridge

Fork / C - Terminal for wire connection

Dimensions in mm.

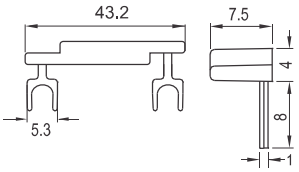

S8LD-B1
1 Way Bridge for Coil

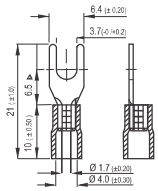

Fork / C type crimped Terminal used for wire connection

Approvals

TÜV CE c UL us